creavit belgium

Product Code **UL060**
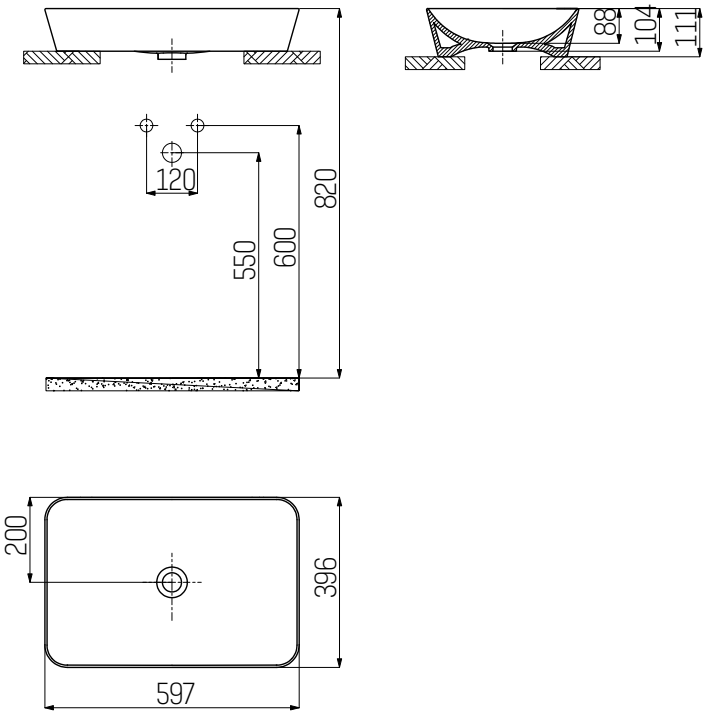
TECHNICAL DRAWING